Copying of this document and giving it to others and the use of communication of the contents thereof are forbidden without express authority. Offenders are liable to the payment of damages. All rights reserved in the event of the grant of a patent or the registration of a utility model or design.

Weitergabe sowie Vervielfältigung dieser Unterlage, Verwertung und Mitteilung ihres Inhalts nicht gestattet, soweit nicht ausdrücklich zugestanden. Zuwiderhandlungen verpflichten zu Schadenersatz. Alle Rechte vorbehalten, insbesondere für den Fall der Patenterteilung oder GM-Eintrag.

BRD Rev.	SCH Rev.	Date:	History:
E01	E01	13/01/29	initial version
E01	E01	13/02/06	official approval by IFX
E02	E02	13/05/14	replace XC161 by XMC4200 remove of SYNC gate delay circuits
		13/07/26	XMC4200 IO-port definition finished, schematic finalised
E03	E03	13/08/06	RC-filtering for current added additional adc channel for current reading
E03.1	E03.1	23/08/06	changes during putting into operation

fiducial marks (top)

fiducial marks (bottom)

			DATE	05.11.2013 10:42:40
			ENGR.	M. Tauer
			APVD.	
REVISION NUM.	DATE	OWNER	STATUS	

control digital

digital control module for CoolMOS and JFET 600W LLC

Saved as 131031_control_digital_XMC4200_E0211/2

FinePower GmbH
Carl-Zeiss-Ring 21
D-85737 Ismaning
Tel. +49 (0) 89 38 98 75 8-0
Fax +49 (0) 89 38 98 75 8-22
www.finepower.com

Copying of this document and giving it to others and the use of communication of the contents thereof are forbidden without express authority. Offenders are liable to the payment of damages. All rights reserved in the event of the grant of a patent or the registration of a utility model or design.

Weitergabe sowie Vervielfältigung dieser Unterlage, Verwertung und Mitteilung ihres Inhalts nicht gestattet, soweit nicht ausdrücklich zugestanden. Zuwiderhandlungen verpflichten zu Schadenersatz. Alle Rechte vorbehalten, insbesondere für den Fall der Patenterteilung oder GM-Eintrag.

POWER SUPPLY

max. height of electrolytic caps is 5mm !!!

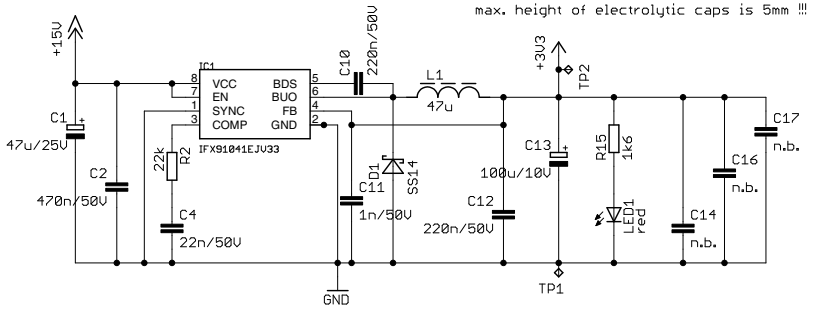

STATUS LED

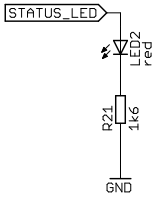

MICROCONTROLLER

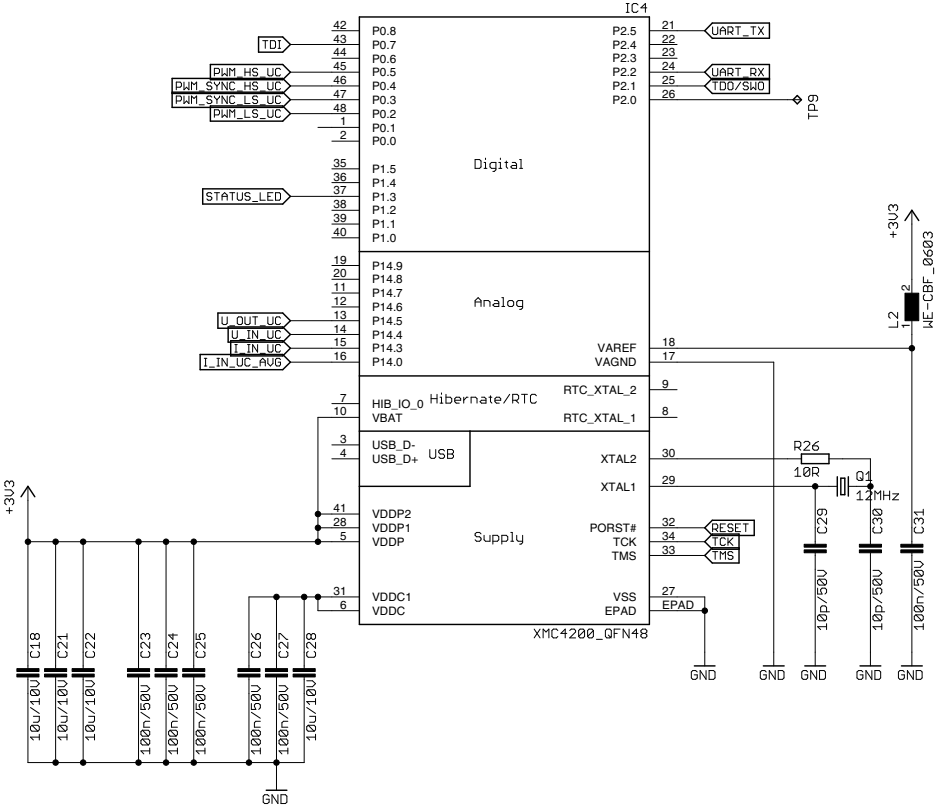

SIGNAL CONNECTOR

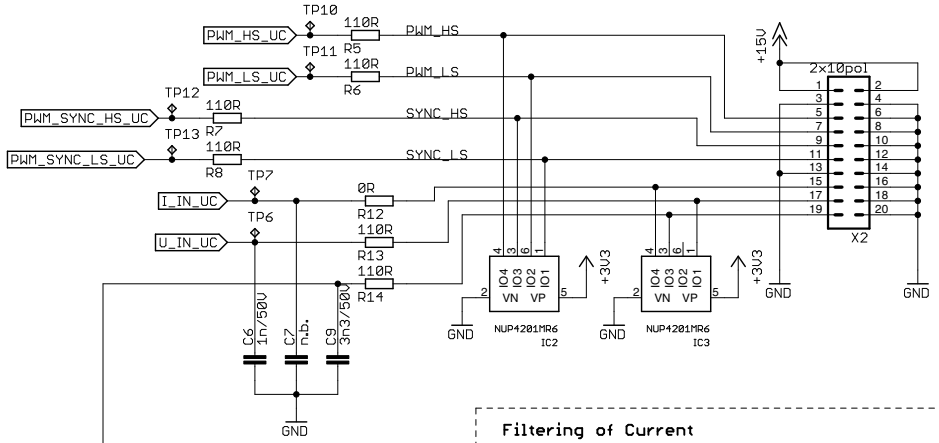

Filtering of Current

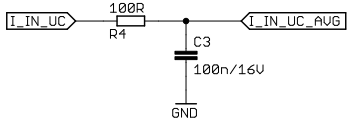

DAP CONNECTOR FOR MiniWiggler

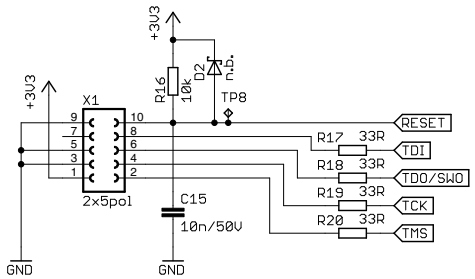

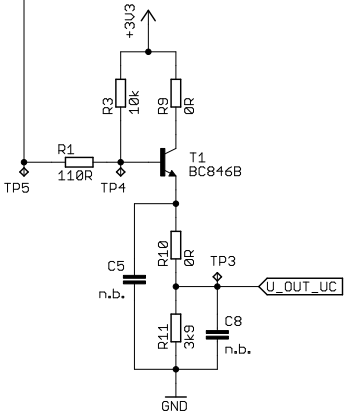

SERIAL COMMUNICATION CONNECTOR

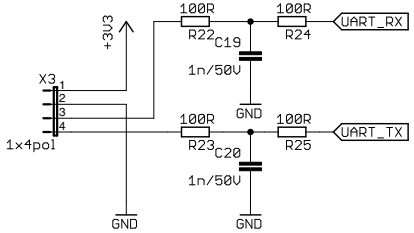

COPPER AREA FOR FIXING PCB BY SOLDERING

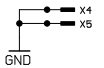

			DATE	05.11.2013 10:42:40
			ENGR.	M. Tauer
			APVD.	
REVISION NUM.	DATE	OWNER	STATUS	

control digital

digital control module for CoolMOS and JFET 600W LLC

Saved as 131031_control_digital_XMC4200_E0221V2

FinePower GmbH
Carl-Zeiss-Ring 21
D-85737 Ismaning
Tel. +49 (0) 89 38 88 75 8-0
Fax +49 (0) 89 38 88 75 8-22
www.finepower.com